PI500A Series basicfrequency inverter user Manual

1.Foreword

Thank you for choosing POWTRAN PI500A Serices basic frequency inverter .

The diagram of operating manual ,Maybe slightly different from the product for convenience of explanation, Due to product upgrades, they may be slightly different. Please refer to the actual product.

The end-users should hold this manual,and keep it well for furture maintenance & care .

For any problem within the warranty period,please fill out the warranty card and fix it to our authorized dealer

2.Instructions on nameplate

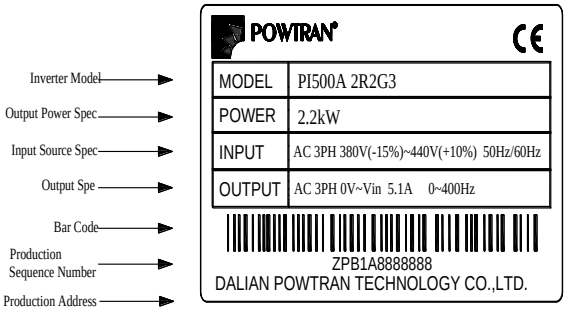

Model designation

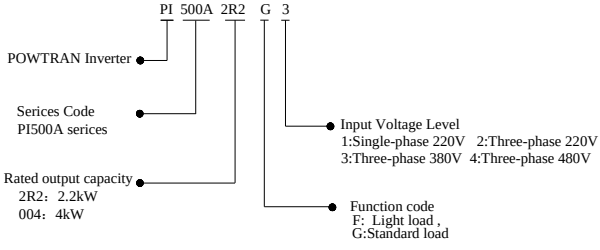

3.Dimension

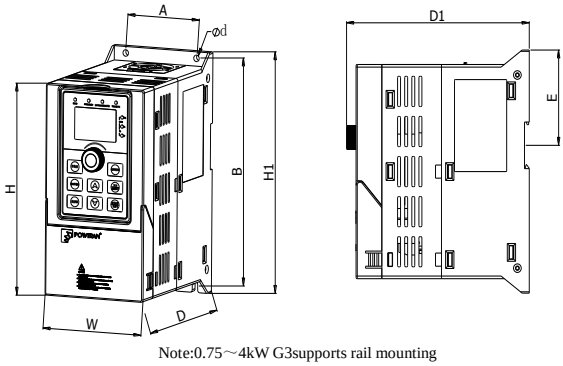

Note:0.75～4kW G3supports rail mounting

0.75～4kW G3 Dimensions

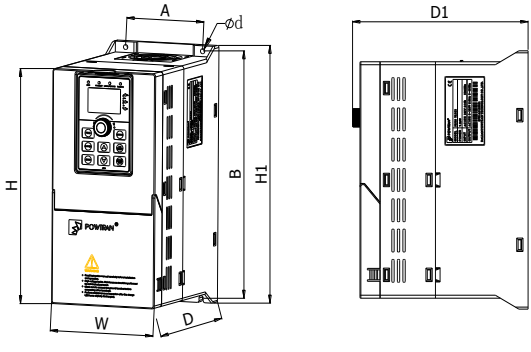

5.5～11kW G3 Dimensions

Model	Rated output power(kW)	Dimension(mm)					Installation dimension(mm)			G.W（kg）
		H	H1	W	D	D1	A	B	d	
PI500A 0R4G1	0.4	163	185	90	146	154	65	174	5	1.6
PI500A 0R4G2	0.4									
PI500A 0R7G1	0.75									
PI500A 0R7G2	0.75									
PI500A 0R7G3	0.75									
PI500A 0R7G4	0.75									
PI500A 1R5G2	1.5									
PI500A 1R5G3	1.5									
PI500A 1R5G4	1.5									
PI500A 2R2G3	2.2									

PI500A 2R2G4	2.2									
PI500A 1R5G1	1.5	163	185	90	166	174	65	174	5	1.8
PI500A 2R2G1	2.2									
PI500A 2R2G2	2.2									
PI500A 004G3	4									
PI500A 004G4	4									
PI500A 004G1	4	238	260	120	182	190	90	250	5	2.7
PI500A 004G2	4									
PI500A 5R5G2	5.5									
PI500A 5R5G3	5.5									
PI500A 5R5G4	5.5									
PI500A 7R5G3	7.5									
PI500A 7R5G4	7.5									
PI500A 011F3	11									
PI500A 011G3	11									
PI500A 011F4	11									
PI500A 011G4	11									

4.Keyboard description

Operation panel display

4.1 Keyboard Indicators

Indicator flag		Name
Status lamp	RUN	Running indicator light *ON:the inverter is working *OFF:the inverter stops
	LOCAL/ REMOTE	Command indicator light That is the indicator for keyboard operation, terminal operation and remote operation(communication contral) *ON:terminal control working status *OFF:keyboard control working status *Flashing:remote control working status
	FWD/REV	Forward/reverse running light *ON:in forward status *OFF:in reversal status
	TUNE/TC	Motor self-learning/Torque control/Fault indicator *Slow flashing:in the motor tunning status *Quick flashing:in the fault status
Units combination indicator	HzAV	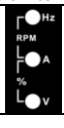

Hz	Frequency unit
A	Current unit
V	Voltage unit
RPM	Speed unit
%	percentage

4.2 Description of operation panel keys

Sign	Name	Function
PRG	Parameter Setting/Esc Key	* Enter into the modified status of main menu * Esc from functional parameter modification * Esc submenu or functional menu to status menu
>> SHIFT	Shift Key	* Choose displayed parameter circularly under running or stop interface;choose parameter's modified position when modify parameter
▲	Increasing Key	* Parameter or function number increasing, set by parameter F6.18.
▼	Decreasing Key	* Parameter or function number increasing, set by parameter F6.19.
RUN	Running Key	* For starting running in the mode of keyboard control status
STOP RST	Stop/Reset Key	* For stopping running in the running status;for resettingthe operation in the fault alarm status .the function of the key is subject to F6.00
ENTER	Enter Key	* Enter the menu screen step by step, set the parameter confirmation.
QUICK	Quick Multifunction Key	*This key function is determined by the function code F6.21.
	Keyboard Encoder	* F0.03 setting to 4, and the keyboard potentiometer setting the operating frequency.

5.Standard specifications

Items		Specifications	
Power Input	Rated voltage	AC 1PH 220V(-15%)～240V(+10%)、AC 3PH 220V(-15%)～240V(+10%) AC 3PH 380V(-15%)～440V(+10%)、AC 3PH 480V(-10%)～480V(+10%)	
	Input frequency	50Hz/60Hz	
	Allowing fluctuations	Voltage continued volatiliy: ±10%	Less than 3% of voltage unbalance rate 3%
		Input frequency fluctution: ±5%;	Distortion satisfy IEC61800-2andard;
	Control system	High performance vector control inverter based on DSP	

Control	Control method		V/F control, vector control W/O PG,
	Automatic torque boost function		Realize low frequency (1Hz) and large output torque control under the V/F control mode.
	Acceleration/deceleration control		Straight or S-curve mode. Four times available and time range is 0.0 to 6500.0s.
	V/F curve mode		Linear, square root/m-th power, custom V/F curve
	Over load capability		G type:rated current 150% - 1 minute, rated current 180% - 2 seconds F type:rated current 120% - 1 minute, rated current 150% - 2 seconds
	Maximum frequency		1.Vector control:0 to 300Hz; 2.V/F control:0 to 3200Hz
	Carrier Frequency		0.5 to 16kHz; automatically adjust carrier frequency according to the load characteristics.
	Input frequency resolution		Digital setting: 0.01Hz Analog setting: maximum frequency*0.025%
	Start torque		G type: 0.5Hz/150% (vector control W/O PG) F type: 0.5Hz/100% (vector control W/O PG)
	Speed range		1:100 (vector control W/O PG)
	Steady-speed precision		Vector control W/O PG: ≤ ± 0.5% (rated synchronous speed)
	Torque response		≤ 40ms (vector control W/O PG)
	Torque boost		Automatic torque boost; manual torque boost(0.1% to 30.0%)
	DC braking		DC braking frequency: 0.0Hz to max. frequency, braking time:0.0 to 100.0 seconds, braking current value: 0.0% to 100.0%
	Jogging control		Jog Frequency Range: 0.00Hz to max. frequency; Jog Ac/deceleration time: 0.0s to 6500.0s
	Built-in PID		Easy to realize closed-loop control system for the process control.
	Automatic voltage regulation(AVR)		Automatically maintain a constant output voltage when the voltage of electricity grid changes
Personalization	Self-inspection ofperipherals after power-on		After powering on, peripheral equipment will perform safety testing, such as ground, short circuit, etc.
	Common DC bus function		Multiple inverter can use a common DC bus.
	Quick current limiting		The current limiting algorithm is used to reduce the inverter over current probability, and improve whole unit anti-interference capability.
	Timing control		Timing control function: time setting range(0m to 6500m)
Running	Input signal	DI input terminal	6 digital input terminals, DI5 for high-speed pulse input(0 to 100 kHz square wave)
		AI1 analog input	1 analog input terminals respectively for optional range (0 to 20mA or 0 to 10V), they can be used to set frequency, output frequency
		Multi-speed	At most 16-speed can be set(run by using the multi-function terminals or program)
		Emergency stop	Interrupt controller output
		Fault reset	When the protection function is active, you can automatically or manually reset the fault condition.
		PID feedback signal	Including DC(0 to 10V), DC(0 to 20mA)
	Output Signal	Output signal	One way output SPA;One way contact output;One way AD1 analog output
		SPA contact output	There are 40 signals each way .Contact capacity : normally open contact 5A/AC 250V,1A/DC 30V.
		DA1 analog output	One way analog output,can select frequency, current ,voltage etc 16 singnals.Output signals can be sent 0～10V/0～20mA
	Running command channel		Three channels: operation panel, control terminals and serial communication port. They can be switched through a variety of ways.
	Frequency source		Total 8 frequency sources: digital, analog voltage,analog current ,multi-speed and serial port. They can be switched through a variety of ways.
	Run function		Limit frequency, jump frequency, frequency compensation, auto-tuning, PID control
Protection function	Inverter protection		Overvoltage protection, undervoltage protection, overcurrent protection, overload protection, overheat protection, overcurrent stall protection, overvoltage stall protection, losting-phase protection (optional), communication error, PID feedback signal abnormalities, PG failure and short circuit to ground protection.
Display	LED display keyboard	Running information	Monitoring objects including: running frequency, set frequency,bus voltage, output voltage, output current, output power, output torque, input terminal status, output terminal status, analog AI1 value,, motor Actual running speed,PID set value percentage, PID feedback value percentage.
		Error message	At most save three error message, and the time, type, voltage,current, frequency and work status can be queried when the failure is occurred.
	Key lock and function selection		Lock part or all of keys, define the function scope of some keys to prevent misuse.
	IGBT temperature		show the inverter inner IGBT temperature
Communication	RS485		Built in 485
Environment	Environment temperature		-10℃to 40℃ (temperature at 40 ℃to 50℃, please derating for use)
	Storage temperature		-20 ℃ to 65 ℃
	Environment humidity		Less than 90% R.H, no condensation.
	Vibration		Below 5.9m/s ²(= 0.6g)
	Application sites		Indoor where no sunlight or corrosive, explosive gas and water vapor, dust, flammable gas,oil mist, water vapor, drip or salt, etc.
	Altitude		No need degrade use under 1000m,degrade 1% for altitude rise 100m when above 1000m,do not use it above 3000m
	Protection level		IP20
Product standard	Product adopts safety standards.		IEC61800-5-1:2007
	Product adoptsEMC standards.		IEC61800-3:2004
Cooling method			Forced air cooling

6. Diagram

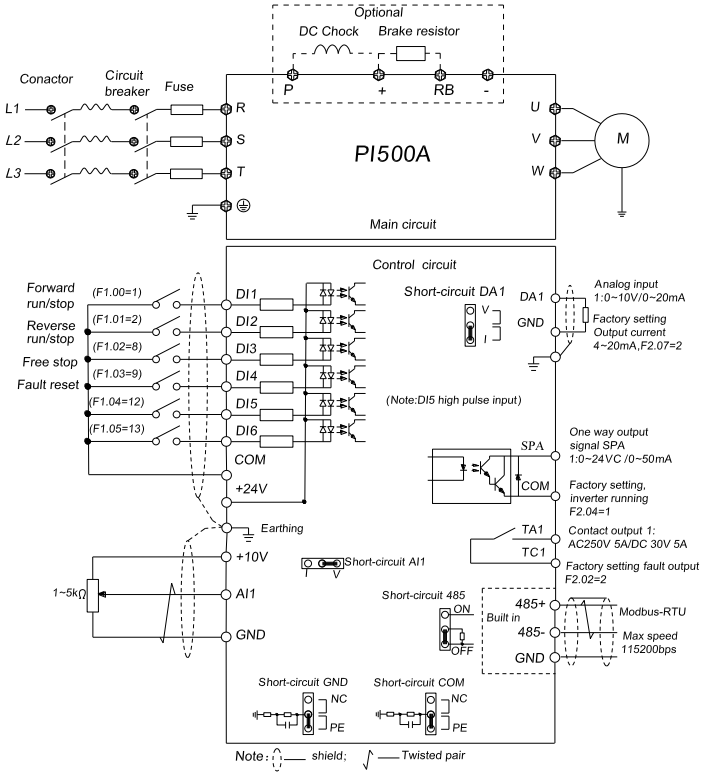

Notes in main circuit wiring

(1)Wiring specifications, please implement wiring in accordance with electrical regulations;

(2)Do not connect AC to the output of frequency converter (U, V, W), otherwise the frequency inverter will be damaged.

(3)Power supply wiring, please try to use isolation line and pipeline, and the isolation line or pipeline ends grounded.

(4)Frequency inverter grounding wire can not be grounded together with welding machine, high-power motor or high current load, please grounding alone;

(5)Grounding please grounding correctly,grounding resistor less than 10Ω;

Notes in wiring control circuit

(1)Please separate the control signal line from the main circuit line and other power lines.

(2)To prevent misoperation caused by interference, use twisted or double shielded wires.,specification 0.5~2mm ²

(3)Make sure the permissible conditions of each terminal, such as power supply, maximum permissible current, etc

(4)The terminal wiring requirements, correct selection of accessories, such as: voltmeter, input power supply, etc. After completing the wiring, please check it correctly and make sure that it is correct before power is available.

(5)After completing the wiring, please check it correctly and make sure that there is no mistake before power can be turned on.

7. Parameter List

In PI500A series frequency inverters, some parameters are "manufacturer reserved", and their serial numbers are not listed in the function parameter table, which leads to the discontinuity of some parameter serial numbers in the table. For the parameters not introduced in the manual, please do not attempt to modify them to avoid causing errors

Monitoring function group

Code	Parameter name	Functional Description	Factory setting
d0.00	Running frequency	Actual output frequency	0.01Hz
d0.01	Set frequency	Actual set frequency	0.01Hz
d0.02	DC bus voltage	Detected value for DC bus voltage	0.1V
d0.03	Output voltage	Actual output voltage	1V
d0.04	Output current	Effective value for Actual motor current	0.01A
d0.05	Output power	Calculated value for motor output power	0.1kW
d0.06	Output torque	Motor output torque percentage	0.1%
d0.07	DI input status	DI input status	-
d0.08	DO output status	DO output status	-
d0.09	AI1 voltage (V)	AI1 input voltage value	0.01V
d0.12	Count value	Actual pulse count value in counting function	-
d0.13	Length value	Actual length in fixed length function	-
d0.14	Actual operating speed	Motor actual running speed	-
d0.15	PID setting	Reference value percentage when PID runs	%
d0.16	PID feedback	Feedback value percentage when PID runs	%
d0.17	PLC stage	Stage display when PLC runs	-
d0.18	HDI(DI5) d pulse input frequency	HDI(DI5) High-speed pulse input frequency display, unit: 0.01Khz	0.01kHz

d0.19	Feedback speed	Inverter actual output frequency	0.01Hz
d0.20	Remaining run time	Remaining run time display, it is for timing run control	0.1Min
d0.21	Linear speed	Show the line speed of DI5 high speed pulse sampling, according to the actual sample pulse number per minute and E0.07, calculate the line speed value.	1m/Min
d0.22	Current power-on time	Total time of current inverter power-on	1Min
d0.23	Current run time	Total time of current inverter run	0.1Min
d0.24	HDI(DI5) impulse frequency	HDI(DI5) High-speed impulse input frequency display, unit: 1Hz	1Hz
d0.25	Communication set value	Frequency, torque or other command values set by communication port	0.01%
d0.27	Master frequency setting display	Frequency set by F0.03 master frequency setting source	0.01Hz
d0.28	Auxiliary frequency setting display	Frequency set by F0.04 auxiliary frequency setting source	0.01Hz
d0.35	Inverter status	Display the running and standby etc status information	-
d0.36	Inverter type	1:G type: Suitable for constant torque load 2:F type: Suitable for variable torque load (fans, pumps load)	-
d0.37	AI1 voltage before correction	Input voltage value before linear correction of AI1	0.01V

Basic function group

Code	Parameter name	Setting range	Factory setting	Change
F0.00	Motor control mode	0:Vector control without PG 2:V/F control	2	★
F0.01	Keyboard set frequency	0.00Hz to F0.19(maximum frequency)	50.00Hz	☆
F0.02	Frequency command resolution	1: 0.1Hz 2: 0.01Hz	2	★
F0.03	Frequency source master setting	0: Keyboard set frequency (F0.01, UP/DOWN can be modified, power-down without memory) 1: Keyboard set frequency (F0.01, UP/DOWN can be modified, power-down with memory) 2: Analog AI1 setting;4: Panel potentiometer setting 5:High-speed pulse setting; 6: Multi-speed operation setting 7: Simple PLC program setting; 8: PID control setting 9:Remote communications setting	1	★
F0.04	Frequency source auxiliary setting	Same as F0.03 setting	0	★
F0.05	Reference object selection for frequency source auxiliary setting	0. Relative to maximum frequency; 1. Relative to master frequency source 1 2. Relative to master frequency source 2	0	☆
F0.06	Frequency source auxiliary setting range	0%～150%	100%	☆
F0.07	Frequency superimposed selection	Units digit: Frequency source selection; Tens digit: Arithmetic relationship of master and auxiliary for frequency source	00	☆
F0.08	Frequency source offset frequency when superimposing	0.00Hz～F0.19(maximum frequency)	0.00Hz	☆
F0.09	Shutdown memory selection for digital set frequency	0: W/O memory; 1: With memory	1	☆
F0.10	UP/DOWN standard	0: Running frequency ; 1: Set frequency	0	★
F0.11	Command source selection	0. Keyboard control (LED off); 1. Terminal block control (LED on) 2. Communications command control (LED flashes) 3. Keyboard control+ Communications command control 4. Keyboard control+ Communications command control+ Terminal block control	0	☆
F0.12	Binding frequency source for command source	Units digit: Keyboard command binding frequency source selection 0:Not binded; 1: Keyboard set frequency; 2:AI1 setting; 4:Panel potentiometer setting 5:High-speed pulse setting; 6:Multi-speed setting 7:Simple PLC setting; 8:PID setting; 9:Communications reference Tens digit: Terminal block command binding frequency source selection (0 to 9, same as units digit) Hundreds digit: Communication command binding frequency source selection (0 to 9, same as units digit)	000	☆
F0.13	Acceleration time 1	0.0s～6500s	Depend on type	☆
F0.14	Deceleration time 1	0.0s～6500s	Depend on type	☆
F0.15	Ac/Deceleration time unit	0:1s; 1:0.1s; 2:0.01s	1	★
F0.16	Ac/deceleration time reference frequency	0:F0.19(Maximum frequency) 1:set frequency; 2:100Hz	0	★
F0.17	Carrier frequency adjustment as per temperature	0:NO ; 1: YES	0	☆
F0.18	Carrier Frequency	0.5kHz～16.0kHz	Depend on type	☆
F0.19	Maximum output frequency	50.00Hz～320.00Hz	50.00Hz	★
F0.20	Upper limit frequency source	0:F0.21 setting;1:AI1 setting; 3:Panel potentiometer setting; 4: High-speed pulse setting;	0	★

		5: Communications reference		
F0.21	Upper limit frequency	F0.23 (lower limit frequency) to F0.19 (maximum frequency)	50.00Hz	☆
F0.22	Upper limit frequency offset	0.00Hz to F0.19 (maximum frequency)	0.00Hz	☆
F0.23	Lower limit frequency	0.00Hz～F0.21(lower limit frequency)	0.00Hz	☆
F0.24	Running direction	0: Same direction; 1: Opposite direction	0	☆
F0.26	AIAnalog accuracy	0: 0.01Hz; 1: 0.05Hz;2: 0.1Hz; 3: 0.5Hz	1	☆

Input terminal parameter group

Code	Parameter name	Setting range	Factory setting	Change
F1.00	DI1 terminal function selection	0～51	1	★
F1.01	DI2 terminal function selection		2	★
F1.02	DI3 terminal function selection		8	★
F1.03	DI4 terminal function selection		9	★
F1.04	DI5 terminal function selection		12	★
F1.05	DI6 terminal function selection		13	★

The functions of digital multi-functional input terminal DI1 ~ DI6 (DI5 can be used as high-speed pulse input terminal) can be set by parameter F1.00 ~ F1.05. The optional functions are shown in the following table:

Set value	Function	Description
0	No function	The terminal for not use can be set to "no function" to prevent accidental operation.
1	Forward run (FWD)	External terminals are used to control the FWD run mode of inverter.
2	Reverse run (REV)	External terminals are used to control the REV run mode of inverter.
3	Three-wire operation control	This terminal is used to determine the inverter's three-wire control mode. For details, please refer to the instructions of function code F1.10 ("terminal command mode).
4	Forward JOG(FJOG)	FJOG means Forward JOG running, RJOG means Reverse JOG running. For Jog running frequency and Jog Ac/deceleration time, please refer to the description of the function code F7.00, F7.01, F7.02.
5	Reverse JOG(RJOG)	
6	Terminal UP	Modify frequency increment/decrement command when the frequency is referenced by external terminal. Adjust up/down the set frequency when the digital setting is selected as the frequency source.
7	Terminal DOWN	
8	Free stop	The inverter output is blocked, at the time, the parking process of motor is not controlled by the inverter. This way is same as the principle of free stop described in F3.07.
9	Fault reset (RESET)	The function make use of terminal for fault reset. It has same function with RESET key on the keyboard. This function can be used to realize remote fault reset.
10	Run pausing	The inverter slows down and stops, but all operating parameters are memorized. Such as PLC parameters, wobbulate frequency parameters, and PID parameters. This terminal signal disappears, the inverter reverts to the previous state of running before parking.
11	External fault normally open input	When the signal is sent to the inverter, the inverter reports fault Err.15, and performs troubleshooting according to fault protection action (for details, please refer to the function code F8.17).
12	Multi-speed terminal 1	The setting of 16 stage speed or 16 kinds of other command can be achieved through the 16 states of the four terminals. For details, see Table 1
13	Multi-speed terminal 2	
14	Multi-speed terminal 3	
15	Multi-speed terminal 4	
16	Ac/deceleration time selection terminal 1	The selection of 4 ac/deceleration times can be achieved through the 4 states of the two terminals. For details, see Table 2
17	Ac/deceleration time selection terminal 2	
18	Frequency source switching	Used to switch between different frequency sources. According to frequency source selection function code (F0.07) settings, the terminal is used to switch between two frequency sources.
19	UP/DOWN setting (terminal, keyboard)	When the frequency reference is the digital frequency, this terminal is used to clear the changed frequency value by terminal UP/DOWN or keyboard UP/DOWN, so that the reference frequency can recover to the set value of F0.01.
20	Run command switch terminal 1	When the command source is set to the terminal control (F0.11 = 1), the terminal can be used to switch between terminal control and keyboard control. When the command source is set to the communication control (F0.11 = 2), the terminal can be used to switch between communication control and keyboard control.
21	Ac/deceleration prohibited	Ensure the inverter is free from external signals affect (except for shutdown command), maintain current output frequency.
22	PID pause	PID is temporarily disabled, the inverter maintains current output frequency, no longer performs PID adjustment of frequency source.
23	PLC status reset	When PLC pauses and runs again, this terminal is used to reset the inverter to the initial state of simple PLC.
24	Wobbulate pause	When the inverter outputs at center frequency. Wobbulate will pause
25	Counter input	Input terminal of the count pulse
26	Counter reset	Clear counter status
27	Length count input	Input terminal of the length count.
28	Length reset	Clear length
30	High-speed pulse input (only valid for DI5)	DI5 is used as pulse input terminal.
32	Immediately DC braking	If the terminal is active, the inverter switches directly to DC braking status
33	External fault normally closed input	When the signal of external fault normally closed input is inputted into the inverter, the inverter will report fault Err.15 and shutdown.
34	Frequency change enable	If the function is set to be valid, when the frequency changes,the inverter does not respond to frequency changes until the terminal state is invalid.
35	PID action direction as reverse	If the terminal is valid, PID action direction opposites to the direction set by E2.03
36	External parking terminal 1	Under keyboard control mode, the terminal can be used to stop the inverter, same as STOP key on the keyboard.
37	Control command switch terminal 2	Used to switch between terminal control and communication control. If the command source is selected as terminal control, the system will be switched to the communication control mode when the terminal is

		active; vice versa.
38	PID integral pause	When the terminal is active, the PID integral adjustment function is paused, but the proportion and differential adjustments of PID are still valid.
39	Switch between frequency source master setting and preset frequency	When the terminal is active, the frequency source A is replaced by the preset frequency (F0.01)
40	Switch between frequency source auxiliary setting and preset frequency	When the terminal is active, the frequency source B is replaced with the preset frequency (F0.01)
43	PID parameter switching	When DI terminal (E2.19 = 1) is used to switch PID parameters, if the terminal is invalid, PID parameters use E2.13 to E2.15; if the terminal is valid, PID parameters use E2.16 to E2.18
44	Custom fault 1	When custom fault 1 and custom fault 2 are active, the inverter respectively alarms fault Err.27 and fault Err.28, and deals with them according to the mode selected by the fault protection action F8.19.
45	Custom fault 2	
48	External parking terminal 2	In any control mode (keyboard control, terminal control, communication control), the terminal can be used to decelerate the inverter until stop, at the time the deceleration time is fixed for deceleration time 4.
49	Deceleration DC braking	If the terminal is valid, firstly the inverter decelerates to the initial frequency of stop DC braking, and then switches directly to DC braking status.
50	Clear current running time	If the terminal is valid, the inverter's current running time is cleared

F1.10	Terminal command mode	0: Two-wire type 1;1: Two-wire type 2; 2: Three-wire type 1;3: Three-wire type 2	0	★
F1.11	Terminal UP / DOWN change rate	0.001Hz/s～65.535Hz/s	1.000Hz/s	☆
F1.12	Minimum input for AIC1	0.00V～F1.14	0.30V	☆
F1.13	F1.12 corresponding setting	-100.0%～+100.0%	0.0%	☆
F1.14	Maximum input for AIC1	F1.12～+10.00V	10.00V	☆
F1.15	F1.14 corresponding setting	-100.0%～+100.0%	100.0%	☆
F1.25	AI input setting selection	Units digit:AI1 Below the minimum input setting selection 0: Corresponding to the minimum input set; 1:0.0%;	000	☆
F1.26	HDI Minimum input	0.00kHz～F1.28	0.00kHz	☆
F1.27	F1.26 Corresponding to the set	-100.0%～+100.0%	0.0%	☆
F1.28	HDI Maximun input	F1.26～100.00kHz	50.00kHz	☆
F1.29	F1.28 Corresponding to the set	-100.0%～+100.0%	100.0%	☆
F1.30	DI filter time	0.000s～1.000s	0.010s	☆
F1.31	AI1 filter time	0.00s～10.00s	0.10s	☆
F1.34	HDI filter time	0.00s～10.00s	0.00s	☆
F1.35	DI terminal Mode Selection 1	Units digit:DI1 : 0:high level active;1: Low level active Tens digit: DI2(ame as the units digit); Hundreds digit:DI3(ame as the units digit) Thousands digit:DI4 (ame as the units digit); Ten thousands digit:DI5(ame as the units digit)	00000	★
F1.36	DI terminal mode selection 2	Units digit:DI6 ;0:high level active;1:Low high level active	00000	★
F1.37	DI1 delay time	0.0s～3600.0s	0.0s	★
F1.38	DI2 delay time	0.0s～3600.0s	0.0s	★
F1.39	DI3 delay time	0.0s～3600.0s	0.0s	★
F1.40	Define the input terminal repeat	0:unrepeatable;1:repeatable	0	★

Output terminal parameter set

Code	Parameter name	Setting range	Factory setting	Change
F2.02	Relay 1 output function selection (TA1.TB1.TC1)	0~39	2	☆
F2.04	SPA output function selection (collector open circuit output terminals)		1	☆

The functions of the relay and SPA output terminal are described as follows:

Set value	Function	Functional Description
0	No output	Output no action
1	Frequency inverter operation	Frequency inverter is operation, there is output frequency,(can be 0) there is output signal
2	Fault Output (Fault Outage)	When the frequency inverter fails and the fault stops, the output.is ON signal
3	Frequency Level Detection FDT1 Output	Please Refer function code F7.23、F7.24
4	Frequency arrival	Please Refer function code F7.25
5	Zero-speed operation (no output when shutdown)	When the frequency inverter runs and the output frequency is 0, the output signal is ON. The signal is OFF when the converter is down.
6	Motor overload forecasting alarm	Before motor overload protection action, the output is ON signal, after the threshold value of overload warning is exceeded. For motor overload parameter setting, refer to function codes F8.02-F8.04.
7	Frequency inverter Overload Forecasting Alarm	The output signal ON 10 seconds before the overload protection occurs.
8	Set count value to arrival	When the count value reaches the value set by E0.08, the output signal is ON
9	Designated count value arrives	When the count value reaches the value set by E0.09, the ON signal is output. Counting function reference E0 group function description
10	Length arrival	When the actual length of detection exceeds the length set by E0.05, the output signal is ON.
11	PLC cycle completed	When a simple PLC completes a cycle, it outputs a pulse signal with a width of 250ms.
12	Accumulated Runtime	When the accumulative running time of the converter exceeds the set

	Arrival	time of F7.21, the output signal is.ON
13	Frequency limiting	When the set frequency exceeds the upper or lower limit frequency, and the output frequency of the frequency inverter also exceeds the upper or lower limit frequency, the output signal is ON
14	Torque limiting	In the speed control mode, when the output torque reaches the limit value of the torque, the frequency inverter is in stall protection state and transmits ON signal at the same time.
15	Operational readiness	When the power supply of the main circuit and control circuit of the frequency inverter is stable, and the frequency inverter does not detect any fault information, and the frequency inverter is in the operational state, the output signal is ON
17	Upper limit frequency arrival	When the operating frequency reaches the upper limit frequency, the output signal is ON.
18	Lower Limit Frequency Arrival (No Output When Down)	When the operating frequency reaches the lower limit frequency, the ON signal is output. The signal is OFF in downtime.
19	Under voltage state output	When the frequency inverter is under-voltage, the output signal is ON.
20	Communication settings	Please refer to the communication protocol.
23	Zero Speed Operation 2 (Output When Down)出))	When the output frequency of the inverter is 0, the ON signal is output. The signal is ON when the machine is down.
24	Accumulated power-on time arrives	When the accumulative power-on time of the frequency inverter (F6.08) exceeds the set time of F7.20, the ON signal is transmitted.
25	Frequency Level Detection FDT2 Output	Please refer the function code description F7.26、F7.27
26	Frequency 1 arrival ouput	Please refer the function code description F7.28、F7.29
27	Frequency 2 arrival output	Please refer the function code description F7.30、F7.31
28	Current 1 arrival output	Please refer the function code description F7.36、F7.37
29	Current 2 arrival output	Please refer the function code description F7.38、F7.39
30	Timed output	When the timing function selection (F7.42) is effective, the ON signal is output after the frequency converter reaches the set timing time.
31	AI1 input overrun	When the value of analog input AI1 is greater than F7.51 (upper limit of AI1 input protection) or less than F7.50 (under AI1 input protection)The ON signal is output.
33	Reverse operation	Converter in reverse operation, output ON signal
34	Zero current state	Please refer the function code description F7.32、F7.33
35	Module temperature arrival	When the module radiator temperature (F6.06) of the inverter reaches the set module temperature (F7.40), the ON signal is output.
36	Software current overrun	Please refer the function code description F7.34、F7.35
37	Lower Limit Frequency Arrival (Outage)	When the operating frequency reaches the lower limit frequency, the ON signal is output. The signal is ON in the downtime state.
38	Alarm output	When the frequency inverter fails and the fault processing mode is to continue running, the frequency inverter alarm output.
40	This run time arrives	When the starting time of the frequency inverter exceeds the time set by F7.45, the ON signal is output.

F2.07	DA1 Output Function Selection	0～17	2	☆

The analog output DA ranges from 0V to 10V, or from 0mA to 20mA. The calibration relationship with the orresponding functions is shown in the following table:

Set value	Function	Description
0	Operating frequency	0～Maximum output frequency
1	Setting frequency	0～Maximum output frequency
2	Output current	0～2times of rated motor current
3	Output torque	0～2times of rated motor torque
4	Output power	0～2times rated power
5	Output voltage	0～1.2times rated frequency voltage
6	High speed pulse input	0.01kHz～100.00kHz
7	Analog AI1	0～10V（或 0～20mA）
10	Length value	0～Maximum set length
11	Count value	0～Maximum count value
12	Communication settings	0.0%～100.0%
13	Motor torque	0～Speed corresponding to maximum output frequency
14	Output current	0.0-100.0 A (frequency inverter power < 55 kW); 0.0-1000.0 A (frequency inverter power > 55 kW)
15	DC Bus Voltage	0.0～1000.0V
17	Frequency source setting	0～Maximum frequency

F2.11	Relay 1 output delay time	0.0s～3600.0s	0.0s	☆
F2.13	SPA output delay time	0.0s～3600.0s	0.0s	☆
F2.15	DO output terminal active status selection	Units digit: SPB switching quantity 0: positive logic 1: anti-logic Tens digit: Relay 1 Hundreds digit: Hundreds digit: Undefined Thousands digit: SPA Ten thousands digit: Relay 2	00000	☆
F2.16	DA1 zero bias coefficient	-100.0%～+100.0%	0.0%	☆
F2.17	DA1 gain	-10.00～+10.00	1.00	☆

Start/stop control parameters group

Code	Parameter name	Setting range	Factory setting	Change
F3.00	Start-up mode	0: Direct startup 1: Reserve 2: Pre-excitation start (AC asynchronous motor)	0	☆
F3.03	Start frequency	0.00Hz～10.00Hz	0.00Hz	☆
F3.04	Hold time for start frequency	0.0s～100.0s	0.0s	★
F3.05	DC beforehand field current	0%～100%	0%	★
F3.06	DC excitation time beforehand	0.0s～100.0s	0.0s	★
F3.07	Stop mode	0: Deceleration parking 1: Free stop	0	☆
F3.08	DC Initial frequency	0.00Hz to F0.19 (maximum frequency)	0.00Hz	☆
F3.09	DC Waiting time	0.0s to 100.0s	0.0s	☆
F3.10	Stop DC braking current	0% to 100%	0%	☆
F3.11	Stop DC braking time	0.0s to 100.0s	0.0s	☆

F3.12	Braking utilization rate	0% to 100%	100%	☆
F3.13	Ac/deceleration mode	0: Linear acceleration and deceleration 1:S curve acceleration and deceleration A 2:S curve acceleration and deceleration B	0	★
F3.14	Proportion of S curve start-section:	0.0%～(100.0%.～F3.15)	30.0%	★
F3.15	Proportion of S curve end-section	0.0%～(100.0%.～F3.14)	30.0%	★

V/F control parameters group

Code	Parameter name	Setting range	Factory setting	Change
F4.00	V/F curve setting	0:straight line V/F;1:Multipoint V/F; 2:square V/F; 3:1.2 square V/F;4:1.4 Square V/F;6;1.6 Square V/F; 8:1.8 Square V/F; 10: V/F completely separated;11:V/F Semi separation	0	★
F4.01	Torque boost	0.0%(Automatic torque boost)0.1 to 30%	0.0%	★
F4.02	Torque boost cut-off frequency	0.00Hz to F0.19(Maximum frequency)	15.00Hz	★
F4.03	Multipoint V/F frequency point 1	0.00Hz～F4.05	0.00Hz	★
F4.04	Multipoint V/F voltage point 1	0.0%～100.0%	0.0%	★
F4.05	Multipoint V/F frequency point 2	F4.03～F4.07	0.00Hz	★
F4.06	Multipoint V/F voltage point 2	0.0%～100.0%	0.0%	★
F4.07	Multipoint V/F frequency point 3	F4.05～b0.04(Rated frequency of motor)	0.00Hz	★
F4.08	Multipoint V/F voltage point 3	0.0%～100.0%	0.0%	★
F4.09	Slip compensation coefficient	0.0%～200.0%	0.0%	☆
F4.10	Overexcitation gain	0～200	80	☆
F4.11	Oscillation suppression gain	0～100	0	☆
F4.12	V/F separation voltage source	0～9	0	☆
F4.13	V/F separation voltage digital setting	0V to rated motor voltage	0V	☆
F4.14	V/F separation voltage rise time	0.0s～1000.0s	0.0s	☆

Vector control parameter group

Code	Parameter name	Setting range	Factory setting	Change
F5.00	Speed loop ratio G1	1～100	30	☆
F5.01	Speed loopintegral T1	0.01s～10.00s	0.50s	☆
F5.02	Switching frequency 1	0.00～F5.05	5.00Hz	☆
F5.03	Speed loop ratio G2	0～100	20	☆
F5.04	Speed loop integral T2	0.01s～10.00s	1.00s	☆
F5.05	switching frequency 2	F5.02 to F0.19(max. frequency)	10.00Hz	☆
F5.06	Speed loop integral	0:valid 1:invalid	0	☆
F5.07	Torque limit upper limit source	0: Function code F5.08 setting;1: Analog AI1 setting; 3: Panel potentiometer setting;4: High speed pulse setting; 5:Communication settings;	0	☆
F5.08	Upper limit digital setting for torque	0.0%～200.0%	150.0%	☆
F5.09	Vector control differential gain	50%～200%	150%	☆
F5.10	Speed loop filter time constant	0.000s～0.100s	0.000s	☆
F5.11	Vector control overexcitation gain	0～200	64	☆
F5.12	Excitation regulator proportional gain	0～60000	2000	☆
F5.13	Excitation regulator integral gain	0～60000	1300	☆
F5.14	Torque regulator proportional gain	0～60000	2000	☆
F5.15	Torque regulator integral gain	0～60000	1300	☆

Keyboard and Display Parameter Group

Code	Parameter name	Setting range	Factory setting	Change
F6.00	STOP/RESET key functions	0: STOP/RES key is enabled only under keyboard operation mode 1:STOP/RES key is enabled under any operation mode	1	☆
F6.01	Running status display parameters 1	0x0000～0xFFFF	001F	☆
F6.02	Running status display parameters 2	0x0000～0xFFFF	0000	☆
F6.03	Stop status display parameters	0x0001～0xFFFF	0033	☆
F6.04	Load speed display coefficient	0.0001～6.5000	3.0000	☆
F6.05	Decimal places for load speed display	0:0 decimal places 2:2 decimal places 1:1 decimal places 3:3 decimal places	1	☆
F6.06	Inverter module radiator temperature	0.0℃～100.0℃	-	●
F6.07	Total run time	0h～65535h	-	●
F6.08	Total power-on time	0h～65535h	-	●
F6.09	Total power consumption	0～65535kwh	-	●
F6.10	Product series number	Frequency inverter series number	-	●
F6.11	Software version number	Control board software version	-	●

F6.17	Power correction coefficient	0.00～10.00	1.00	☆
F6.20	Keypad lock selection	0:RUN, STOP button valid 2: RUN, STOP, UP, DOWN button valid 3: STOP button valid Note: Keyboard potentiometers are not limited by this function	0	☆
F6.21	QUICK key function selection	0: no function; 1: Jog running 2: Shift switch display state 3: FWD/RVS switchover 4: Clear-up UP/DOWN setting 5: Free stop; 6: running command given in sequence	1	☆

Auxiliary Functional Parameters Group

Code	Parameter name	Setting range	Factory setting	Chang
F7.00	Jog running frequency	0.00Hz～F0.19(maximum frequency)	6.00Hz	☆
F7.01	Jog acceleration time	0.0s～6500.0s	5.0s	☆
F7.02	Jog deceleration time	0.0s～6500.0s	5.0s	☆
F7.03	Jog priority	0:Invalid;1:Valid	1	☆
F7.04	Jump frequency 1	0.00Hz～F0.19(maximum frequency)	0.00Hz	☆
F7.05	Jump frequency 2	0.00Hz～F0.19(maximum frequency)	0.00Hz	☆
F7.06	Jump frequency range	0.00Hz～F0.19(maximum frequency)	0.00Hz	☆
F7.07	Jump frequency availability during ac/deceleration process	0:Invalid; 1:Valid	0	☆
F7.08	Acceleration time 2	0.0s～6500.0s	Depends on models	☆
F7.09	Deceleration time 2	0.0s～6500.0s	Depends on models	☆
F7.10	Acceleration time 3	0.0s～6500.0s	Depends on models	☆
F7.11	Deceleration time 3	0.0s～6500.0s	Depends on models	☆
F7.12	Acceleration time 4	0.0s～6500.0s	Depends on models	☆
F7.13	Deceleration time 4	0.0s～6500.0s	Depends on models	☆
F7.14	Switching frequency point between acceleration time 1 and acceleration time 2	0.00Hz～F0.19(maximum frequency)	0.00Hz	☆
F7.15	Switching frequency point between deceleration time 1 and deceleration time 2	0.00Hz～F0.19(maximum frequency)	0.00Hz	☆
F7.16	Forward/reverse rotation deadband	0.00s～3600.0s	0.00s	☆
F7.17	Reverse rotation control	0:Allow ;1:prohibit	0	☆
F7.18	Set frequency lower than lower limit frequency mode	0:Running at lower limit frequency;1:Stop;2:Zero speed running	0	☆
F7.19	Droop control	0.00Hz～10.00Hz	0.00Hz	☆
F7.20	Setting cumulative power-on arrival time	0h～36000h	0h	☆
F7.21	Setting cumulative running arrival time	0h～36000h	0h	☆
F7.22	Start protection	0:OFF; 1:ON	0	☆
F7.23	Frequency detection value (FDT1)	0.00Hz～F0.19(maximum frequency)	50.00Hz	☆
F7.24	Frequency detection hysteresis value (FDT1)	0.0%～100.0%(FDT1 level)	5.0%	☆
F7.25	Frequency reaches detection width	0.00～100%(maximum frequency)	0.0%	☆
F7.26	Frequency detection value (FDT2)	0.00Hz～F0.19(maximum frequency)	50.00Hz	☆
F7.27	Frequency detection hysteresis value (FDT2)	0.0%～100.0%(FDT2 level)	5.0%	☆
F7.28	Random arrivals frequency detection value 1	0.00Hz～F0.19(maximum frequency)	50.00Hz	☆
F7.29	Random arrivals frequency detection width 1	0.0%～100.0%(maximum frequency)	0.0%	☆
F7.30	Random arrivals frequency detection value 2	0.00Hz～F0.19(maximum frequency)	50.00Hz	☆
F7.31	Random arrivals frequency detection width 2	0.0%～100.0%(maximum frequency)	0.0%	☆
F7.32	Zero current detection level	0.0%～300.0%(rated motor current)	5.0%	☆
F7.33	Zero current detection delay time	0.01s～360.00s	0.10s	☆
F7.34	Overrun value of output current	0.0%(not detected);0.1%～300.0%(rated motor current)	200.0%	☆
F7.35	Output Current overrun detection delay time	0.00s～360.00s	0.00s	☆
F7.36	Random arrivals current 1	0.0%～300.0%(rated motor current)	-100.0%	☆
F7.37	Random arrivals current 1 width	0.0%～300.0%(rated motor current)	0.0%	☆
F7.38	Random arrivals current 2	0.0%～300.0%(rated motor current)	-100.0%	☆
F7.39	Random arrivals current 2 width	0.0%～300.0%(rated motor current)	0.0%	☆
F7.40	Module temperature arrival	0℃～100℃	75℃	☆
F7.41	Cooling fan control	0:Fan running only when running 1:Fan always running	0	☆
F7.42	Timing function selection	0:Invalid 1:Valid	0	★

F7.43	Timing run time selection	0:F7.44setting;1: Analog AI1;3: Panel potentiometer Note:Analog input range 100% corresponds to F7.44	0	★
F7.44	Timing run time	0.0Min～6500.0Min	0.0Min	★
F7.45	Current running arrival time.	0.0Min～6500.0Min	0.0Min	★
F7.46	Awakens frequency	Dormancy frequency(F7.48)～maximum frequency(F0.19)	0.00Hz	☆
F7.47	Awakens delay time	0.0s～6500.0s	0.0s	☆
F7.48	Dormancy frequency	0.00Hz～awakens frequency(F7.46)	0.00Hz	☆
F7.49	Dormancy delay time	0.0s～6500.0s	0.0s	☆
F7.50	AI1 input voltage protection lower limit	0.00V～F7.51	3.1V	☆
F7.51	AI1 input voltage protection upper limit	F7.50～10.00V	6.8V	☆

Fault and Protection Parameter Group

Code	Parameter name	Setting range	Factory setting	Change
F8.00	Overcurrent stall gain	0～100	20	☆
F8.01	Overcurrent stall protection current	100%～200%	-	☆
F8.02	Motor overload protection	0:Prohibit;1:Allow	1	☆
F8.03	Motor overload protection gain	0.20～10.00	1.00	☆
F8.04	Motor overload pre-alarm coefficient	50%～100%	80%	☆
F8.05	Overvoltage stall gain	0～100	0	☆
F8.06	Overvoltage stall protection voltage / energy consumption brake voltage	120%～150%	130%	☆
F8.08	Output phase loss protection selection	0:Prohibit;1:Allow	1	☆
F8.09	Power-on short circuit to ground	0:Invalid;1:Valid	1	☆
F8.10	Number of automatic fault reset	0～32767	0	☆
F8.11	Fault DO action selection during automatic fault reset	0:OFF;1:ON	0	☆
F8.12	Automatic fault reset interval	0.1s～100.0s	1.0s	☆
F8.25	Abnormal reserve frequency	60.0%～100.0%	100%	☆
F8.26	Momentary power cut action selection	0:Invalid;1:Deceleration;2:Deceleration and stop	0	☆
F8.28	Recovery voltage judgment time of momentary power cut	0.00s～100.00s	0.50s	☆
F8.29	Judgment voltage of momentary power cut	50.0%～100.0%(standard bus voltage)	80%	☆

Communication parameter set

Code	Parameter name	Setting range	Factory setting	Change
F9.00	Baud rate	Units digit:Modbus 2:1200BPS;3:2400BPS;4:4800BPS;5:9600BPS 6:19200BPS;7:38400BPS;8:57600BPS;9:115200BPS Tens digit:Reserved ;Hundreds digit: Reserved;Thousands digit:Reserved	6005	☆
F9.01	Data format	0:No parity(8-N-2);1:Even parity(8-E-1) 2:Odd parity(8-O-1)　3:No parity(8-N-1)	0	☆
F9.02	This unit address	1～250,0 for broadcast address	1	☆
F9.03	Response delay	0ms～20ms	2ms	☆
F9.04	Communication timeout time	0.0(invalid);0.1～60.0s	0.0	☆
F9.05	Data transfer format selection	Units digit:Modbus 0:Non-standard MODBUS protocol;1:Standard MODBUS protocol Tens digit:Profibus-DP 0:PPO1 format;1:PPO2 format;2:PPO3 format;3:PPO5 format	31	☆
F9.06	Communication read current resolution	0:0.01A ;1:0.1A	0	☆
F9.07	Communication card type	0:Modbus communication card	0	☆

Control optimization parameter group

Code	Parameter name	Setting range	Factory setting	Change
Fb.00	Fast current limiting manner	0:Disable;1: enable	1	☆
Fb.01	Undervoltage point setting	50.0%～140.0%	100.0%	☆
Fb.02	Overvoltage point setting	200.0～2500.0V	-	★
Fb.03	Deadband compensation mode selection	0:no compensation; 1:compensation mode 1; 2:compensation mode 2	1	☆
Fb.04	Current detection compensation	0～100	5	☆
Fb.05	Vector optimization without PG mode selection	0:no optimization;　1:optimization mode 1; 2:optimization mode 2	1	★
Fb.06	Upper limiting frequency for DPWM switching	0.00～15.00Hz	12.00Hz	☆
Fb.07	PWM modulation method	0:asynchronous;1:synchronous	0	☆
Fb.08	PWM modulation manner	0:Invalid 1～10:PWM carrier frequency random depth	0	☆

Pendulum Frequency, Fixed Length and Counting Parameter Array

Code	Parameter name	Setting range	Factory setting	Change
E0.00	Swing setting mode	0:relative to center frequency; 1:relative to maximum requency	0	☆
E0.01	Wobbulate range	0.0%～100.0%	0.0%	☆
E0.02	Sudden jump frequency range	0.0%～50.0%	0.0%	☆
E0.03	Wobbulate circle	0.1s～3000.0s	10.0s	☆
E0.04	Triangle wave rise time coefficient	0.1%～100.0%	50.0%	☆
E0.05	Set length	0m～65535m	1000m	☆
E0.06	Actual length	0m～65535m	0m	☆
E0.07	Pulse per meter	0.1～6553.5	100.0	☆
E0.08	Set count value	1～65535	1000	☆
E0.09	Specified count value	1～65535	1000	☆

Multi-Section Instruction and Simple PLC Parameter Set

Code	Parameter name	Setting range	Factory setting	Change
E1.00	0-stage speed setting 0X	-100.0% to 100.0%	0.0%	☆
E1.01	1-stage speed setting 1X	-100.0% to 100.0%	0.0%	☆
E1.02	2-stage speed setting 2X	-100.0% to 100.0%	0.0%	☆
E1.03	3-stage speed setting 3X	-100.0% to 100.0%	0.0%	☆
E1.04	4-stage speed setting 4X	-100.0% to 100.0%	0.0%	☆
E1.05	5-stage speed setting 5X	-100.0% to 100.0%	0.0%	☆
E1.06	6-stage speed setting 6X	-100.0% to 100.0%	0.0%	☆
E1.07	7-stage speed setting 7X	-100.0% to 100.0%	0.0%	☆
E1.08	8-stage speed setting 8X	-100.0% to 100.0%	0.0%	☆
E1.09	9-stage speed setting 9X	-100.0% to 100.0%	0.0%	☆
E1.10	10-stage speed setting 10X	-100.0% to 100.0%	0.0%	☆
E1.11	11-stage speed setting 11X	-100.0% to 100.0%	0.0%	☆
E1.12	12-stage speed setting 12X	-100.0% to 100.0%	0.0%	☆
E1.13	13-stage speed setting 13X	-100.0% to 100.0%	0.0%	☆
E1.14	14-stage speed setting 14X	-100.0% to 100.0%	0.0%	☆
E1.15	15-stage speed setting 15X	-100.0% to 100.0%	0.0%	☆
E1.16	Simple PLC running mode	0: stop after single running 1: hold final value after single running 2: circulating	0	☆
E1.17	Simple PLC power-down memory selection	Units digit: power-down memory selection 0: power-down without memory 1: power-down with memory Tens digit: stop memory selection 0: stop without memory 1: stop with memory	11	☆
E1.18	0 stage running time T0	0.0s(h) to 6500.0s(h)	0.0s(h)	☆
E1.19	0 stage ac/deceleration time selection	0:F0.13、F0.14;1:F7.08、F7.09; 2:F7.10、F7.11;3:F7.12、F7.13	0	☆
E1.20	1 stage running time T1	0.0s(h) to 6500.0s(h)	0.0s(h)	☆
E1.21	1 stage ac/deceleration time selection	Same as E1.19	0	☆
E1.22	2 stage running time T2	0.0s(h) to 6500.0s(h)	0.0s(h)	☆
E1.23	2 stage ac/deceleration time selection	Same as E1.19	0	☆
E1.24	3 stage running time T3	0.0s(h) to 6500.0s(h)	0.0s(h)	☆
E1.25	3 stage ac/deceleration time selection	Same as E1.19	0	☆
E1.26	4 stage running time T4	0.0s(h) to 6500.0s(h)	0.0s(h)	☆
E1.27	4 stage ac/deceleration time selection	Same as E1.19	0	☆
E1.28	5 stage running time T5	0.0s(h) to 6500.0s(h)	0.0s(h)	☆
E1.29	5 stage ac/deceleration time selection	Same as E1.19	0	☆
E1.30	6 stage running time T6	0.0s(h) to 6500.0s(h)	0.0s(h)	☆
E1.31	6 stage ac/deceleration time selection	Same as E1.19	0	☆
E1.32	7 stage running time T7	0.0s(h) to 6500.0s(h)	0.0s(h)	☆
E1.33	7 stage ac/deceleration time selection	Same as E1.19	0	☆
E1.34	8 stage running time T8	0.0s(h) to 6500.0s(h)	0.0s(h)	☆
E1.35	8 stage ac/deceleration time selection	Same as E1.19	0	☆
E1.36	9 stage running time T9	0.0s(h) to 6500.0s(h)	0.0s(h)	☆
E1.37	9 stage ac/deceleration time selection	Same as E1.19	0	☆
E1.38	10 stage running time T10	0.0s(h) to 6500.0s(h)	0.0s(h)	☆
E1.39	10 stage ac/deceleration time selection	Same as E1.19	0	☆
E1.40	11 stage running time T11	0.0s(h) to 6500.0s(h)	0.0s(h)	☆
E1.41	11 stage ac/deceleration time selection	Same as E1.19	0	☆
E1.42	12 stage running time T12	0.0s(h) to 6500.0s(h)	0.0s(h)	☆

E1.43	12 stage ac/deceleration time selection	Same as E1.19	0	☆
E1.44	13 stage running time T13	0.0s(h) to 6500.0s(h)	0.0s(h)	☆
E1.45	13 stage ac/deceleration time selection	Same as E1.19	0	☆
E1.46	14 stage running time T14	0.0s(h) to 6500.0s(h)	0.0s(h)	☆
E1.47	14 stage ac/deceleration time selection	Same as E1.19	0	☆
E1.48	15 stage running time T15	0.0s(h) to 6500.0s(h)	0.0s(h)	☆
E1.49	15 stage ac/deceleration time selection	Same as E1.19	0	☆
E1.50	Simple PLC run-time unit	0: S (seconds) 1: H (hours)	0	☆
E1.51	Multi-stage command 0 reference manner	0: Function code E1.00 reference 1: Analog AI1 reference 3: Panel potentiometer setting 4: High-speed pulse setting 5: PID control setting 6:Keyboard set frequency (F0.01) setting, UP/DOWN can be modified	0	☆

PID functional parameter group

Code	Parameter name	Setting range	Factory setting	Change
E2.00	PID setting source	0: E2.01 setting 1: Analog AI1 reference 3: Panel potentiometer setting 4: High-speed pulse setting 5: Communications reference 6: Multi-stage command reference	0	☆
E2.01	PID keyboard reference	0.0% to 100.0%	50.0%	☆
E2.02	PID feedback source	0.Analog AI1 reference 2. Panel potentiometer setting 4: High-speed pulse setting 5: Communications reference	0	☆
E2.03	PID action direction	0: positive 1: negative	0	☆
E2.04	PID setting feedback range	0 to 65535	1000	☆
E2.05	PID inversion cutoff frequency	0.00 to F0.19(maximum frequency)	0.00Hz	☆
E2.06	PID deviation limit	0.0% to 100.0%	2.0%	☆
E2.07	PID differential limiting	0.00% to 100.00%	0.10%	☆
E2.08	PID reference change time	0.00s to 650.00s	0.00s	☆
E2.09	PID feedback filter time	0.00s to 60.00s	0.00s	☆
E2.10	PID output filter time	0.00s to 60.00s	0.00s	☆
E2.11	PID feedback loss detection value	0.0%: not judged feedback loss 0.1% to 100.0%	0.0%	☆
E2.12	PID feedback loss detection time	0.0s to 20.0s	0.0s	☆
E2.13	Proportional gain KP1	0.0 to 200.0	80.0	☆
E2.14	Integration time Ti1	0.01s to 10.00s	0.50s	☆
E2.15	Differential time Td1	0.00s to 10.000s	0.000s	☆
E2.16	Proportional gain KP2	0.0 to 200.0	20.0	☆
E2.17	Integration time Ti2	0.01s to 10.00s	2.00s	☆
E2.18	Differential time Td2	0.00 to 10.000	0.000s	☆
E2.19	PID parameter switching conditions	0: no switching; 1: switching via terminals 2: automatically switching according to deviation.	0	☆
E2.20	PID parameter switching deviation 1	0.0% to E2.21	20.0%	☆
E2.21	PID parameter switching deviation 2	E2.20 to 100.0%	80.0%	☆
E2.22	PID integral properties	Units digit: integral separation 0: Invalid; 1: Valid Tens digit: whether stop integration when output reaches limit 0: continue; 1: stop	00	☆
E2.23	PID initial value	0.0% to 100.0%	0.0%	☆
E2.24	PID initial value hold time	0.00s to 360.00s	0.00s	☆
E2.25	Maximum deviation of twice outputs(forward)	0.00% to 100.00%	1.00%	☆
E2.26	Maximum deviation of twice outputs(backward)	0.00% to 100.00%	1.00%	☆
E2.27	Computing status after PID stop	0: stop without computing; 1: stop with computing	1	☆
E2.29	PID automatic decrease frequency selection	0:invalid;1:valid	1	☆
E2.30	PID stop frequency	0.00Hz~maximum frequency(F0.19)	25	☆
E2.31	PID checking time	0s~3600s	10	☆
E2.32	PID checking times	10~500	20	☆

Motor Parameters

Code	Parameter name	Setting range	Factory setting	Change
b0.00	Motor type selection	0: general asynchronous motor 1: asynchronous inverter motor	0	★
b0.01	Rated power	0.1kW to 1000.0kW	Depends on models	★
b0.02	Rated voltage	1V to 2000V	Depends on models	★

b0.03	Rated current	0.01A to 655.35A (inverter power ≦ 55kW) 0.1A to 6553.5A (inverter rate> 55kW)	Depends on models	★
b0.04	Rated frequency	0.01Hz to F0.19 (maximum frequency)	Depends on models	★
b0.05	Rated speed	1rpm to 36000rpm	Depends on models	★
b0.06	Asynchronous motor stator resistance	0.001Ω to 65.535Ω (inverter power <= 55kW) 0.0001Ω to 6.5535Ω (inverter power> 55kW)	Motor parameters	★
b0.07	Asynchronous motor rotor resistance	0.001Ω to 65.535Ω (inverter power <= 55kW) 0.0001Ω to 6.5535Ω (inverter power> 55kW)	Motor parameters	★
b0.08	Asynchronous motor leakage inductance	0.01mH to 655.35mH (inverter power <= 55kW) 0.001mH to 65.535mH (inverter power> 55kW)	Motor parameters	★
b0.09	Asynchronous motor mutUal inductance	0.1mH to 6553.5mH (inverter power <= 55kW) 0.01mH to 655.35mH (inverter power> 55kW)	Motor parameters	★
b0.10	Asynchronous motor no-load current	0.01A to b0.03 (inverter power <= 55kW) 0.1A to b0.03 (inverter power> 55kW)	Motor parameters	★
b0.27	Motor parameter auto tunning	0: no operation 1: asynchronous motor parameters still auto tunning 2: asynchronous motor parameters comprehensive auto tunning	0	★

Function code management

Code	Parameter name	Setting range	Factory setting	Change
y0.00	Parameter initialization	0: no operation 1: restore default parameter values, not including motor parameters 2: clear history 3: restore default parameter values, including motor parameters 4: backup current user parameters 501: restore from backup user parameters	0	★
y0.01	User password	0 to 65535	0	☆
y0.02	Function parameter group display selection	Units digit: d group display selection 0: not displays 1: displays Tens digit: E group display selection(the same above) Hundreds digit:b group display selection(the same above) Thousands digit:y group display selection(the same above) Tens thousands digit:L group display selection(the same above)	11111	★
y0.03	Personality parameter group display selection	Units digit:User's customization parameter display selection 0:not display 1:display Tens digit :User's change parameter display selection 0:not display 1:display	00	☆
y0.04	Function code modification properties	0: modifiable 1: not modifiable	0	☆

Fault query parameter group

Code	Parameter name	Setting range	Factory setting	Change
y1.00	Type of the first fault	0: No fault 1: Inverter unit protection 2: Acceleration overcurrent 3: Deceleration overcurrent 4: Constant speed overcurrent 5: Acceleration overvoltage 6: Deceleration overvoltage 7: Constant speed overvoltage 8: Control power failure 9: Undervoltage 10: Inverter overload 11: Motor Overload 13: Output phase loss 14: Module overheating 15: External fault 16: Communication abnormal 17: Contactor abnormal 18: Current detection abnormal 19: Motor self-learning abnormal 21: Parameter read and write abnormal 22: Inverter hardware abnormal 23: Motor short to ground 26: Running time arrival 27: Custom fault 1 28: Custom fault 2 29; Power-on time arrival 31: PID feedback loss when running 40: Fast current limiting timeout 51:Initial position error COF: communication failure	-	●
y1.01	Type of the second fault		-	●
y1.02	Type of the third(at last) fault		-	●
y1.03	Frequency of the third(at last) fault	-	-	●
y1.04	Current of the third(at last) fault	-	-	●
y1.05	Bus voltage of the third(at last) fault	-	-	●
y1.06	Input terminal status of the third(at last) fault	-	-	●
y1.07	Output terminal status of the third(at last) fault	-	-	●
y1.08	Reserved			
y1.09	Power-on time of the third(at last) fault	-	-	●
y1.10	Running time of the third(at last) fault	-	-	●
y1.13	Reserve	-	-	●

y1.14	Reserve	-	-	●
y1.15	Frequency of the second fault	-	-	●
y1.16	Current of the second fault	-	-	●
y1.17	Bus voltage of the second fault	-	-	●
y1.19	Input terminal status of the second fault	-	-	●
y1.20	Output terminal status of the second fault	-	-	●
y1.23	Reserved	-	-	●
y1.24	Power-on time of the second fault	-	-	●
y1.25	Running time of the second fault	-	-	●
y1.26	Reserve	-	-	●
y1.27	Reserve	-	-	●
y1.29	Frequency of the first fault	-	-	●
y1.30	Running time at first failure	-	-	●

8. Fault alarm and countermeasures

PI500A can provide effective protection when the equipment performance is played fully. In case of abnormal fault, the protection function will be invoked, the inverter will stop output, and the faulty relay contact of the inverter will start, and the fault code will be displayed on the display panel of the inverter. Before consulting the service department, user can perform self-check , analyze the fault cause and find out the solution according to the instructions of this chapter. If the fault is caused by the reasons as described in the dotted frame, please consult the agents of inverter or directly contact with our company.

No.	Fault ID	Failure type	Possible causes	Solutions
1	Err.01	Inverter unit protection	1.the short circuit of inverter output happens 2.the wiring for the motor and the inverter is too long 3.module overheating 4.the internal wiring of inverter is loose 5.the main control panel is abnormal 6.the drive panel is abnormal. 7.the inverter module is abnormal	1.eliminate peripheral faults 2.additionally install the reactor or the output filter 3.check the air duct is blocked or not and the fan is working normally or not, and eliminate problems 4.correctly plug all cables 5.seek for technical support
2	Err.02	Acceleration overcurrent	1.the acceleration time is too short 2.manual torque boost or V/F curve is not suitable 3.the voltage is low 4.the short-circuit or earthing of inverter output happens 5.the control mode is vector and without identification of parameters 6.the motor that is rotating is started unexpectedly. 7.suddenly increase the load in the process of acceleration. 8.the type selection of inverter is small	1.increase acceleration time 2.adjust manual torque boost or V/F curve 3.set the voltage to the normal range 4.eliminate peripheral faults 5.perform identification for the motor parameters 6.select Speed Tracking Start or restart after stopping the motor. 7.cancel the sudden load 8.choose the inverter with large power level
3	Err.03	Deceleration overcurrent	1.the short-circuit or earthing of inverter output happens 2.the control mode is vector and without identification of parameters 3.the deceleration time is too short 4.the voltage is low 5.suddenly increase the load in the process of deceleration. 6.didn't install braking unit and braking resistor	1.eliminate peripheral faults 2.perform identification for the motor parameters 3.increase the deceleration time 4.set the voltage to the normal range 5.cancel the sudden load 6.install braking unit and brake resistor
4	Err.04	Constant speed overcurrent	1.the short-circuit or earthing of inverter output happens 2.the control mode is vector and without identification of parameters 3.the voltage is low 4, whether suddenly increase the load when running 5.the type selection of inverter is small	1.eliminate peripheral faults 2.perform identification for the motor parameters 3.set the voltage to the normal range 4.cancel the sudden load 5.choose the inverter with large power level
5	Err.05	Acceleration overvoltage	1.didn't install braking unit and braking resistor 2.the input voltage is high 3.there is external force to drag the motor to run when accelerating. 4.the acceleration time is too short	1.install braking unit and brake resistor 2.set the voltage to the normal range 3.cancel the external force or install braking resistor. 4.increase acceleration time
6	Err.06	Deceleration overvoltage	1.the input voltage is high 2.there is external force to drag the motor to run when decelerating. 3.the deceleration time is too short 4.didn't install braking unit and braking resistor	1.set the voltage to the normal range 2.cancel the external force or install braking resistor. 3.increase the deceleration time 4.install braking unit and brake resistor
7	Err.07	Constant speed overvoltage	1.there is external force to drag the motor to run when running 2.the input voltage is high	1.cancel the external force or install braking resistor. 2.set the voltage to the normal range
8	Err.08	Control power failure	The range of input voltage is not within the specification	Adjust the voltage to the range of the requirements of specification
9	Err.09	Under voltage fault	1.the momentary power cut 2.the inverter's input voltage is not within the specification 3.the bus voltage is not normal 4.the rectifier bridge and buffer resistance are abnormal 5.the drive panel is abnormal. 6.the control panel is abnormal	1.reset fault 2.adjust the voltage to the normal range 3.seek for technical support
10	Err.10	Inverter overload	1.the type selection of inverter is small 2.whether the load is too large or	1.choose the inverter with large power level 2.reduce the load and check the

			the motor stall occurs	motor and its mechanical conditions
11	Err.11	Motor Overload	1. power grid voltage is too low 2.whether the setting motor protection parameters (F8.03) is appropriate or not 3.whether the load is too large or the motor stall occurs	1.check the power grid voltage 2.correctly set this parameter. 3.reduce the load and check the motor and its mechanical conditions
13	Err.13	Input phase loss	1.the drive panel is abnormal. 2.the lightning protection plate is abnormal 3.the main control panel is abnormal 4.the three-phase input power is not normal	1.replace the drive, the power board or contactor 2.seek for technical support 3.check and eliminate the existing problems in the peripheral line
14	Err.14	Output phase loss	1.the lead wires from the inverter to the motor is not normal 2.the inverter's three phase output is unbalanced when the motor is running 3.the drive panel is abnormal. 4.the module is abnormal	1.eliminate peripheral faults 2.check the motor's three-phase winding is normal or not and eliminate faults 3.seek for technical support
15	Err.15	Module overheating	1.the air duct is blocked 2.the fan is damaged 3.the ambient temperature is too high 4.the module thermistor is damaged 5.the inverter module is damaged	1.clean up the air duct 2.replace the fan 3.decrease the ambient temperature 4.replace the thermistor 5.replace the inverter module
16	Err.16	External equipment fault	Input external fault signal through the multi-function terminal DI	Reset run
17	Err.17	Communicatio n fault	1.the communication cable is not normal 2.the settings for communication expansion card F9.07 are incorrect 3.the settings for communication parameters F9 group are incorrect 4.the host computer is not working properly	1.check the communication cable 2.correctly set the communications expansion card type 3.correctly set the communication parameters 4.check the wiring of host computer
18	Err.18	Contactor fault	1.input phase loss 2.the drive plate and the contact are not normal	1.check and eliminate the existing problems in the peripheral line 2.replace the drive, the power board or contactor
19	Err.19	Current detection fault	1.check Hall device 2.the drive panel is abnormal.	1.replace the drive panel 2.replace hall device
21	Err.21	Motor parameter auto tuning fault	1.the motor parameters was not set according to the nameplate 2.the identification process of parameter is timeout	1.correctly set motor parameter according to the nameplate 2.check the lead wire from the inverter to the motor
22	Err.22	Disk code fault	1.the encoder is damaged 2.PG card is abnormal 3.the encoder model does not match 4.the encoder connection has error	1.replace the encoder 2.replace the PG card 3.correctly set the encoder model according to the Actual conditions 4.eliminate the line fault
23	Err.23	EEPROM read and write fault	EEPROM chip is damaged	Replace the main control panel
26	Err.26	Inverter hardware fault	1.overvoltage 2.overcurrent	1.eliminate overvoltage fault 2.eliminate overcurrent fault
27	Err.27	Short-circuit to ground fault	Motor short to ground	Replace the cable or motor
28	Err.28	Cumulative running time arrival fault	Cumulative running time arrival fault	Clear history information by using initialization function parameters
29	Err.29	Custom fault 1	Input custom fault 1 signal through the multi-function terminal DI	Reset run
31	Err.31	Custom fault 2	Input custom fault 2 signal through the multi-function terminal DI	Reset run
40	Err.40	Total power-on time arrival fault	Total power-on time reaches the set value	Clear history information by using initialization function parameters
41	Err.41	Load drop fault	The inverter running current is less than F8.31	Confirm whether the load is removed or not or the settings for parameter(F8.31, F8.32) accord with the Actual operating conditions
42	Err.42	PID feedback loss when running fault	PID feedback is less than the set value of E2.11	Check PID feedback signal or set E2.11 to an appropriate value
51	Err.51	Quick current limiting fault	1.whether the load is too large or the motor stall occurs 2.the type selection of inverter is small	1.reduce the load and check the motor and its mechanical conditions 2.choose the inverter with large power level
-	COF	Switch motor when running fault	Change current motor through the terminal when the inverter is running	Switch motor after the inverter stops